your wellness company

EN

# Instructions Manual

## CORE B4

COREB4.4.AXX

Electric Beauty Bed

VERSION 7.26

weelko your wellness company

# 1.Welcome!

Congratulations on purchasing this new electric beauty bed.

To ensure your proper use of the COREB4.4.AXX Beauty Chair, please read this manual.

The illustrations used in this manual are intended to illustrate the product's operation.

Please keep this manual properly for future reference.

# 2.Warnings and precautions

• Never under any circumstances attempt to open or inspect the internal components of the bed. If an inspection becomes necessary, please contact your supplier or a suitably competent technician.

•Never use the bed in humid or poorly ventilated environments, such as wet rooms, bathrooms etc. to prevent damage to the electrical components. Any prolonged exposure to high moisture conditions may affect the electrical components and may result in failure.

•Never use the unit outdoors; exposure to the elements can cause damage.

•If the power cord was destroyed, please ask a professional to service and replace it to avoid hazards or contact the dealer for service.

•The maximum allowed lifting limit is around 180 kg. Do not exceed this weight.

• Always ensure that the bed is used within the correct electrical voltage range. Unless otherwise requested, beds are manufactured 220-240v rated and should be used with the same rated supply.

• When the bed is placed for use, always ensure that the power cord is in such a way, that it will not get caught in the moving parts or jammed under the bed or any other little piece of furniture nearby.

· Children are not allowed to use the bed or be near the equipment while it is on use. Do not leave children unsupervised near the bed.

•Always take care to avoid anyone sitting on the head or leg parts of the bed since this will cause damage to the bed and its electronic, hydraulic and mechanical functions.

•When lifting your bed for moving it, always lift by the metal frame beneath the casing at each side. Unplug it prior to any movement. 2 or more persons should move the bed due to its size and weight.

# 3.Product specifications

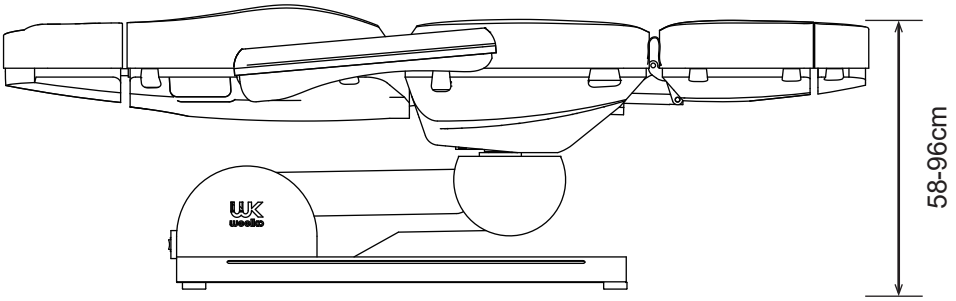


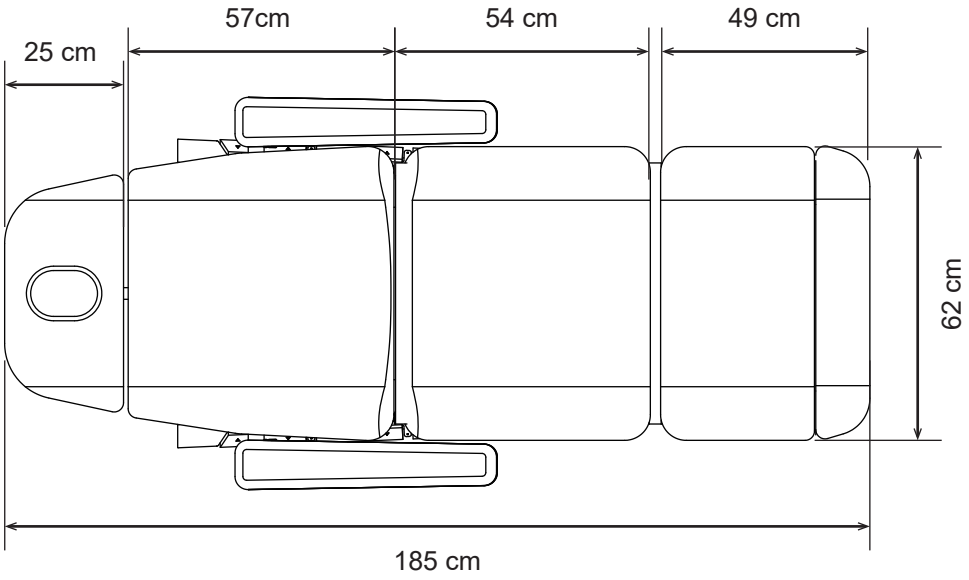


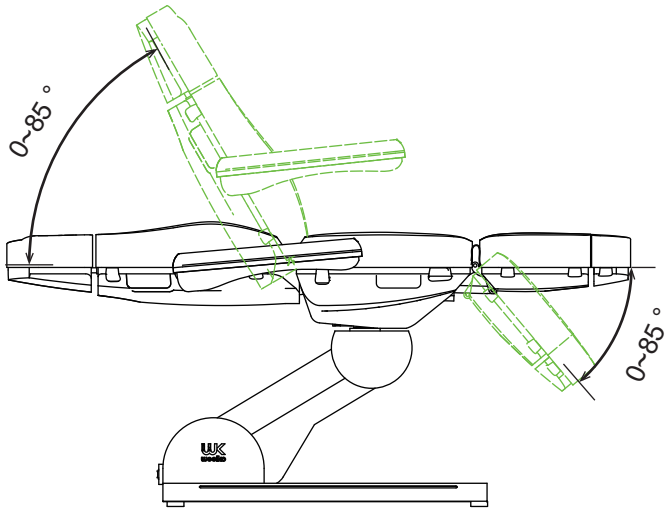


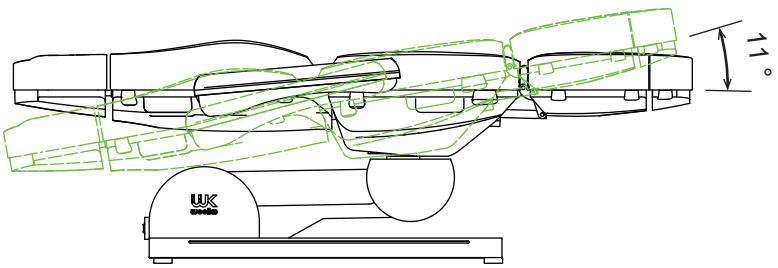

Product size: 1850 x 620 x 580-960mm

Backrest angle: 85°

Seat inclination angle: 11°

Footrest angle: 85°

Net Weight: 108 Kg

Gross Weight: 115 Kg

Maximum load: 180Kg

Power: AC 220-240V, 50/60Hz

Maximum Power: 300W

# 4.Operation

Headrest:

To assemble the headrest, tighten the 4 screws following the drawing instructions below. All the parts and screws come with the bed packaging.

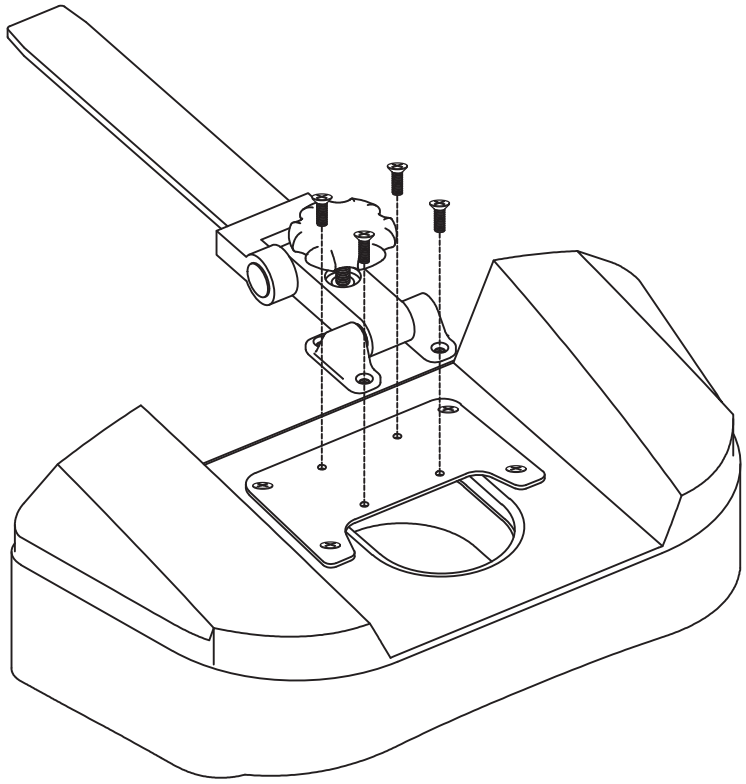

**Hand controller:**

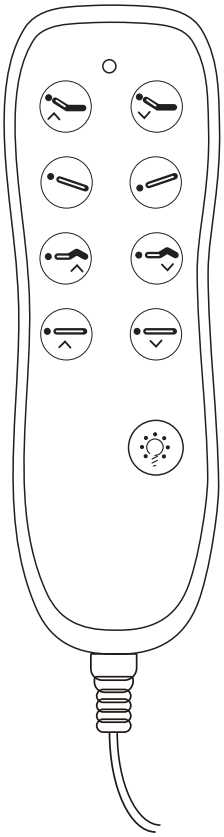

1. Press or button to control the lifting angle of the backrest of the electric bed.
2. Press or button to control the tilt angle of the electric bed cushion.
3. Press or button to control the lifting angle of the footrest of the electric bed.
4. Press or button to control the rising or lowering of the whole electric bed.
5. Press button to active the light and adjust the brightness.

Switch Panel:
1. Ensure the power cord and hand controller or foot controller are properly inserted in the correct direction
and locked as indicated by the arrow.
2. Turn on the power switch; the indicator should be steadily lit.
3. If the device shows no response, turn off the power, open the fuse box, check the fuse, and replace it if necessary.

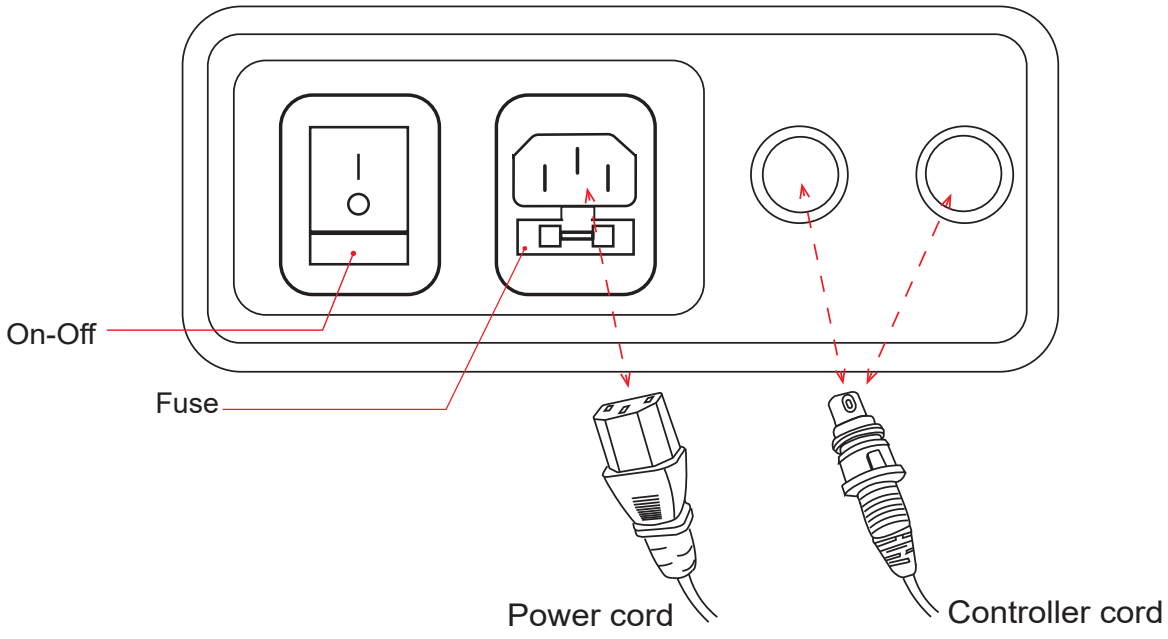

# 5.Maintenance

1. Daily Cleaning:
- Gently wipe away dust from the product surface using a soft, dry cloth.

2. Stain Removal:
- For stubborn dirt that won't come off with a regular dry cloth, use a soft towel dampened with a diluted neutral cleaner. After cleaning, dry the area thoroughly with a clean, dry cloth.

3. Avoid Solvents:
- Refrain from using solvents such as benzene, thinners, or gasoline, as these can damage the product's leather or erode the surface of the product casing.

4. Storage and Usage Conditions:
- Keep the product out of direct sunlight and humid environments to prevent damage.
- The product is designed to operate in temperatures ranging from -5° C to +50° C and at a relative humidity of 45% to 85%.

5. Routine Maintenance:
- Regularly lubricate moving parts (annually) to ensure smooth operation and prolong the product's lifespan.

Please adhere to these maintenance tips to maintain the product's performance and appearance over time.

# 6.Troubleshooting

Please try the following fault diagnoses and eliminating operations if you find a fault in your using thisproduct.

| Phenomenon | Diagnosis | Eliminating Operations |
|---|---|---|
| Press the control key but nothing happens to the bed | 1.The function of the pressed control key has been switched to the extremity;<br>2.Whether the power plug isproperly inserted;<br>3. Whether all connecting plugs of the transformer are inserted properly; 4.Quality problem of manual control board. | 1.Try to press other control keys;<br>2.Unplug the power plug and replug it;<br>3.Unplug and replug;<br>4.Replace the manual control panel. |
| Abnormal sound and shaking during the lifting and lowering of the chair | 1.The screws are loose<br>2.All the rotational components are lacking of lubricating oil<br>3.Quality problem of motor | 1.Tighten all screws<br>2. Add some lubricant<br>3.Replace the motor |

Imported by
WEELKO BARCELONA SL
Pol. Ind. La Valldan
Camí de Garreta, 92
08600 Berga
Barcelona - Spain
T. +34 93 824 90 20
E. info@weelko.com